Hygienic Butterfly Valves

Zenith Butterfly Valves have proven functionality and reliability.
Designed in 1998, the Zenith valve allows full interchangeability of most handles, actuators and parts available on the market. Zenith valves are used extensively in all Hygienic Process Industries.

Full maintenance and assembly instructions are available on request

Special Features:-

- Superior Hygienic Design
- Easy to assemble/disassemble
- Low Torque - longer Seal Life
- For use up to 150 psi/10 bar
- 100% Tested & Inspected

General Characteristics:-

Diameters:
INCH: 1/2"– 3/4" - 1"– 1.5" – 2" – 2.5"– 3"– 4"– 6"
25mm – 38mm – 51mm - 63.5mm – 76mm – 104mm
DN25 – DN32 – DN40 – DN50 – DN65 -DN80 -DN100

Materials:

Flanges	- Forged 316L Stainless Steel
Disc	- Forged 316L Stainless Steel Polished.
Finish	- All wetted surfaces are polished <0.5 Ra
Seals	- Food Grade EPDM, Silicone, Viton

Standards:

US3A	-	Clamp
BS & 3A	-	Weld Ends
RJT	-	BS4825 Part 5
IDF	-	BS4825 Part 4
SMS	-	SMS 1148, 1147, 1146
DIN	-	DIN 11851

Valve Ends:
Weld/Weld, Male/Male, Male/Female, Clamp/Ferrule

Torque for full Open/Close:

SIZE	1"	1 1/2"	2"	2 1/2"	3"	4"
MAX. TORQUE (NM)	10	10	13	15	20	30
MINI. TORQUE (KGF-M)	<1	<1	1.3	1.5	2	3.1

Each valve undergoes high and low pressure testing before leaving the factory.

HYGIENIC BUTTERFLY VALVE WELD, RJT MALE, FERRULE

ZENITH HYGIENIC PLAIN ENDED BUTTERFLY VALVE 316

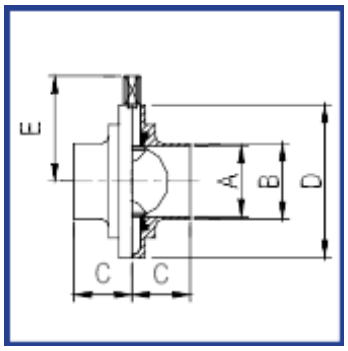

PART NO.	SIZE	A (MM)	B (MM)	C (MM)	D (MM)	E (MM
BFVW	1/2"	9.50	12.7	34.0	79.0	61.0
BFVW	3/4"	15.8	19.05	34.0	79.0	61.0
BFVW	1"	22.2	25.4	34.0	79.0	61.0
BFVW	1 ½"	34.9	38.1	38.0	85.0	64.3
BFVW	2"	47.6	50.8	40.0	105.0	74.3
BFVW	2 ½"	60.3	63.5	40.0	112.0	77.6
BFVW	3"	73.0	76.2	41.0	125.0	84.7
BFVW	4"	97.6	101.6	44.0	157.0	101.6
BFVW	6"	146.8	152.4	57.0	214.0	138.9

ZENITH HYGIENIC RJT MALE/MALE BUTTERFLY VALVE 316

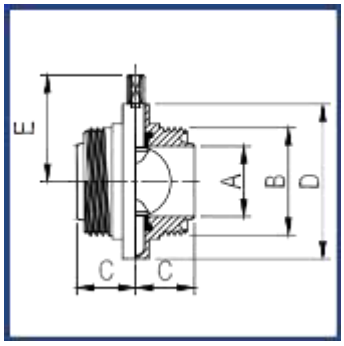

PART NO.	SIZE	A (MM)	B (MM)	C (MM)	D (MM)	E (MM
BFVRJTM	1"	22.2	45.72 x 8 Whit	34.0	79.0	61.0
BFVRJTM	1 1/2"	34.9	58.42 x 8 Whit	38.0	85.0	64.3
BFVRJTM	2"	47.6	72.72 x 6 Whit	40.0	105.0	74.3
BFVRJTM	2 1/2"	60.3	85.42 x 6 Whit	40.0	112.0	77.6
BFVRJTM	3"	73.0	98.12 x 6 Whit	41.0	125.0	84.7
BFVRJTM	4"	97.6	123.52 x 6 Whit	50.0	157.0	101.6

ZENITH HYGIENIC BS CLAMP/CLAMP BUTTERFLY VALVE 316

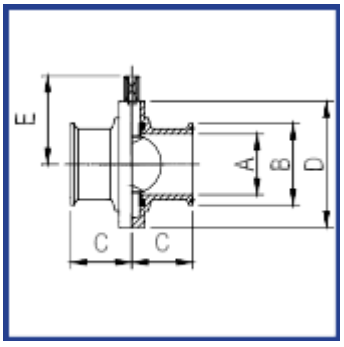

PART NO.	SIZE	A (MM)	B (MM)	C (MM)	D (MM)	E (MM
BFVFR	1/2"	9.5	25.2	34.0	79.0	61.0
BFVFR	3/4"	15.8	25.2	34.0	79.0	61
BFVFR	1"	22.2	50.5	33.0	79.0	61.0
BFVFR	1 1/2"	34.9	50.5	33.0	85.0	64.3
BFVFR	2"	47.6	64.0	35.0	105.0	74.3
BFVFR	2 1/2"	60.3	77.5	35.0	112.0	77.6
BFVFR	3"	73.0	91.0	38.0	125.0	84.7
BFVFR	4"	97.6	119.0	38.0	157.0	101.6
BFVFR	6"	146.8	166.8	70.0	216.0	138.9

HYGIENIC BUTTERFLY VALVE WELD, SMS MALE, FERRULE

ZENITH HYGIENIC SMS PLAIN ENDED BUTTERFLY VALVE 316

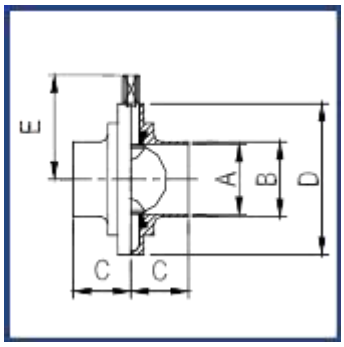

PART NO.	SIZE	A (MM)	B (MM)	C (MM)	D (MM)	E (MM
BFVSMS	25	22.5	25.0	34.0	79.0	61.0
BFVSMS	38	35.5	38.0	38.0	85.0	64.3
BFVSMS	51	48.4	51.0	40.0	105.0	74.3
BFVSMS	63.5	60.4	63.5	40.0	112.0	77.6
BFVSMS	76	72.3	76.1	41.0	125.0	84.7
BFVSMS	104	99.88	104.0	44.0	157.0	101.6

ZENITH HYGIENIC SMS MALE/MALE BUTTERFLY VALVE 316

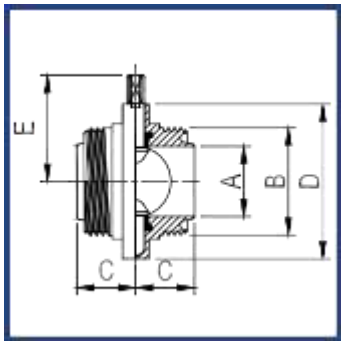

PART NO.	SIZE	A (MM)	B (MM)	C (MM)	D (MM)	E (MM
BFVSMSW	25	22.5	RD40 x 1/6	34.0	79.0	61.0
BFVSMSW	38	35.5	RD60 x 1/6	38.0	85.0	64.3
BFVSMSW	51	48.4	RD70 x 1/6	40.0	105.0	74.3
BFVSMSW	63.5	60.4	RD85 x 1/6	40.0	112.0	77.6
BFVSMSW	76	72.7	RD98 x 1/6	41.0	125.0	84.7
BFVSMSW	104	99.88	RD125 x 1/4	44.0	157.0	101.6

ZENITH HYGIENIC SMS CLAMP/CLAMP BUTTERFLY VALVE 316

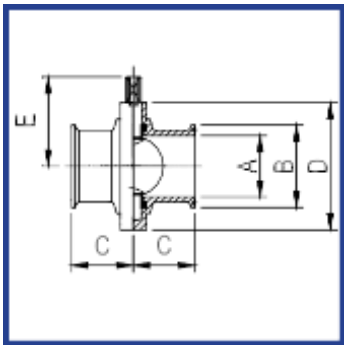

PART NO.	SIZE	A (MM)	B (MM)	C (MM)	D (MM)	E (MM
BFVSMSFR	25	22.5	50.5	44.5	79.0	61.0
BFVSMSFR	38	35.5	50.5	44.5	85.0	64.3
BFVSMSFR	51	48.4	64.0	47.6	105.0	74.3
BFVSMSFR	63.5	60.4	77.5	48.4	112.0	77.6
BFVSMSFR	76	72.7	91.0	51.5	125.0	84.7
BFVSMSFR	104	99.88	119.0	51.5	157.0	101.6

HYGIENIC BUTTERFLY VALVE WELD, DIN MALE, FERRULE

ZENITH HYGIENIC DIN PLAIN ENDED BUTTERFLY VALVE 316

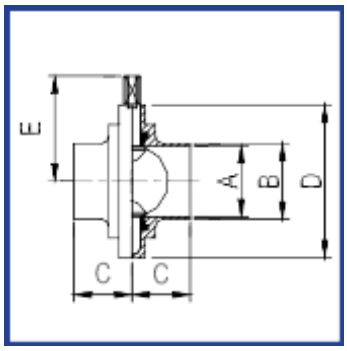

PART NO.	SIZE	A (MM)	B (MM)	C (MM)	D (MM)	E (MM
BFVDINW	DN25	25.0	28.0	34.0	79.0	61.0
BFVDINW	DN32	31.0	34.0	38.0	85.0	64.3
BFVDINW	DN40	37.0	40.0	38.0	90.0	74.3
BFVDINW	DN50	49.0	52.0	40.0	105.0	77.6
BFVDINW	DN65	66.0	70.0	41.0	125.0	84.8
BFVDINW	DN80	81.0	85.0	42.0	137.0	91.6
BFVDINW	DN104	100	104	44.0	157.0	101.7

ZENITH HYGIENIC DIN MALE/MALE BUTTERFLY VALVE 316

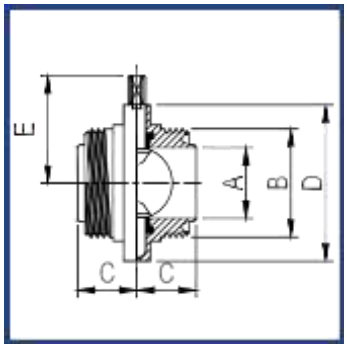

PART NO.	SIZE	A (MM)	B (MM)	C (MM)	D (MM)	E (MM
BFVDINM	DN25	26.0	51.3 D52x1/6	34.0	79	61.0
BFVDINM	DN32	32.0	57.3 D58x1/6	38.0	85	64.3
BFVDINM	DN40	38.0	64.3 D65x1/6	38.0	90	74.3
BFVDINM	DN50	50.0	77.3 D78x1/6	40.0	105	77.6
BFVDINM	DN65	66.0	94.3 D95x1/6	41.0	125	84.8
BFVDINM	DN80	81.0	109 D110x1/4	42.0	137	91.6
BFVDINM	DN101.6	97.6	129 D130x1/4	50.0	157	101.7
BFVDINM	DN104	100	129 D130x1/4	50.0	157	101.7

ZENITH HYGIENIC IDF MALE/MALE BUTTERFLY VALVE 316

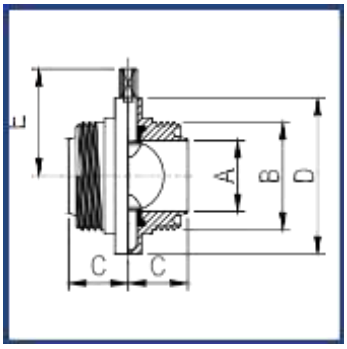

PART NO.	SIZE	A (MM)	B (MM)	C (MM)	D (MM)	E (MM
BFVIDFM	1"	22.4	37.13X8T ACME	34.0	79.0	61.0
BFVIDFM	1 1/2"	35.1	50.65X8T ACME	38.0	85.0	64.3
BFVIDFM	2"	47.8	64.16X8T ACME	40.0	105.0	74.3
BFVIDFM	2 1/2"	60.5	77.76X8T ACME	40.0	112.0	77.6
BFVIDFM	3"	72.0	91.19X8T ACME	41.0	125.0	84.7
BFVIDFM	4"	97.6	125.9X6T ACME	44.0	157.0	101.6

ZENITH
BUTTERFLY VALVE HANDLES

Zenith Handles - Four different styles of handle are available for manual actuation of Butterfly Valves:

TYPE - VG12 - PVC

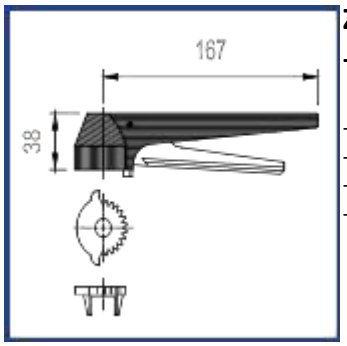

ZENITH BUTTERFLY VALVE
- PVC LEVER HANDLE & NOTCH PLATE

-MULTI-POSITION HANDLE (12 Position).
-NYLON 6+GLASS FIBRE REINFORCED
-LOCKABLE HANDLE AVAILABLE.
- GRIPPER BAR IS SPRING LOADED TO LOCK SECURELY IN NOTCH PLATE TEETH.

TYPE - VG12 - ST/ST

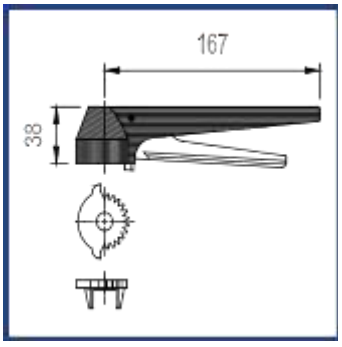

ZENITH BUTTERFLY VALVE
- LEVER HANDLE & NOTCH PLATE IN STAINLESS STEEL

-SS304 HANDLE HANDLE (12 Position).
-STAINLESS STEEL GRIPPER
-LOCKABLE HANDLE AVAILABLE.
- GRIPPER BAR IS SPRING LOADED TO LOCK SECURELY IN NOTCH PLATE TEETH.

TYPE - VG12 - PVC

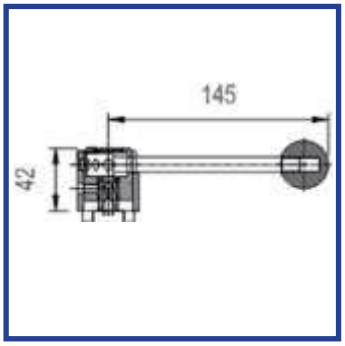

ZENITH BUTTERFLY VALVE
-VP4 STAINLESS STEEL PULL HANDLE 304

- SS304 HANDLE WITH PHENOLIC BALL END
-MACHINED AND POLISHED FOR SANITARY USE
- 4 LOCKING POSITIONS.
- HANDLE SHAFT IS SPRING LOADED TO LOCK SECURELY IN PLACE.

TYPE - SUREGRIP VG12

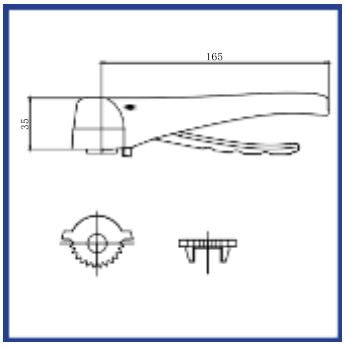

ZENITH BUTTERFLY VALVE
-SUREGRIP VG12 & NOTCH PLATE

-MULTI-POSITION HANDLE (12 Position).
-NYLON 6+GLASS FIBRE REINFORCED
-LOCKABLE HANDLE AVAILABLE.
- GRIPPER BAR IS SPRING LOADED TO LOCK SECURELY IN NOTCH PLATE TEETH.

ZENITH BUTTERFLY VALVE STAINLESS STEEL (SS304)
PNEUMATIC ACTUATOR (AIR/SPRING)
TYPE - VT 1

FOR USE ON 1" - 3" (25MM - 76MM)
BUTTERFLY VALVES

ITEM	DESCRIPTION	QUANITIY
1	Actuation Cylinder	1
2	Air Supply Inlet	1
3	Air Outlet Filter/Silencer	1
4	Valve Mounting Bracket.	1
5	Red Plastic Position Indicator.	1
6	Valve Drive Adaptor.	1
7	Proximity Switches. (Optional) IF5721 (PLASTIC TYPE IF5778 (S/S TYPE)	2
8	Mounting Screws.	2

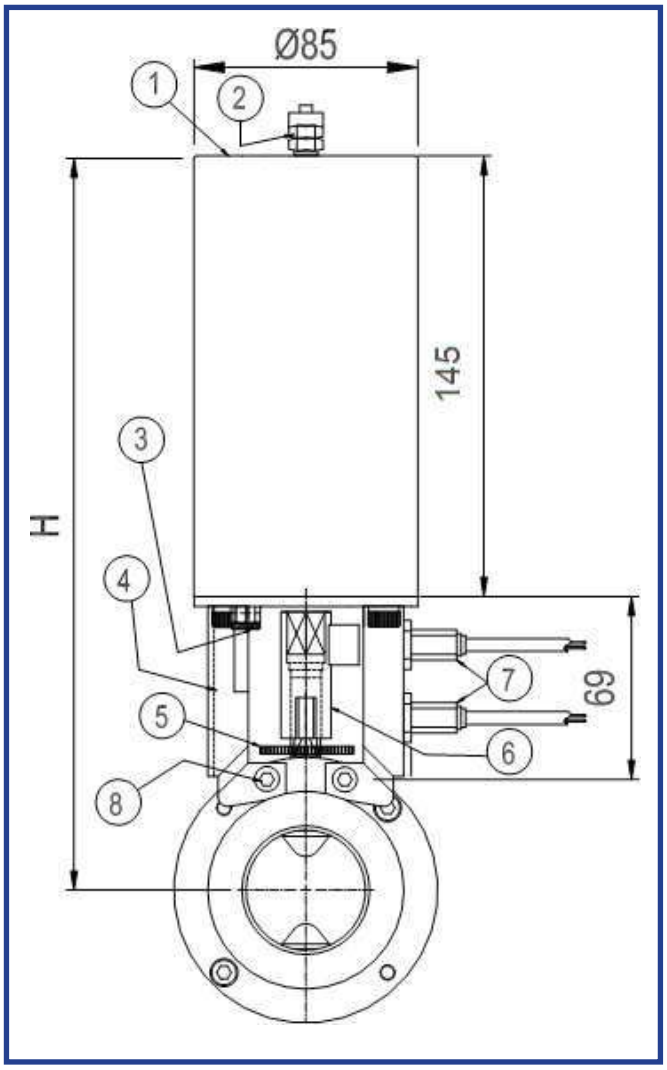

- Shut-off Time = 1.5 Seconds.
- Weight = 3.85Kg.
- Torque = 16 Nm @ 5Bar.
- Consumption = 0.266 Litres @5 Bar

PART NO.	SIZE	H (MM)
N/A	1" (25mm)	249
N/A	1 ½" (38mm)	252
N/A	2" (51mm)	262
N/A	2 ½" (63.5mm)	266
N/A	3" (76mm)	272

- Material:- SS304 body & fitting.
- 2 Positions - Valve fully open & Valve fully closed
- Mounting bracket accommodates inductive proximity switches .
- May be converted to double actingair/air operation
- Accessories: Adaptor X 1, M6 X 35 screw X 2, washer X 4, M6 Nut X 2, 1/8PT Quick coupler X 1

ZENITH BUTTERFLY VALVE STAINLESS STEEL (SS304)
PNEUMATIC ACTUATOR (AIR/SPRING)
TYPE - VT 101

FOR USE ON 4" (104MM)
BUTTERFLY VALVES

ITEM	DESCRIPTION	QUANITIY
1	Actuation Cylinder	1
2	Air Supply Inlet	1
3	Air Outlet Filter/Silencer	1
4	Valve Mounting Bracket.	1
5	Red Plastic Position Indicator.	1
6	Valve Drive Adaptor.	1
7	Proximity Switches. (Optional) IF5721 (PLASTIC TYPE IF5778 (S/S TYPE)	2
8	Mounting Screws.	2

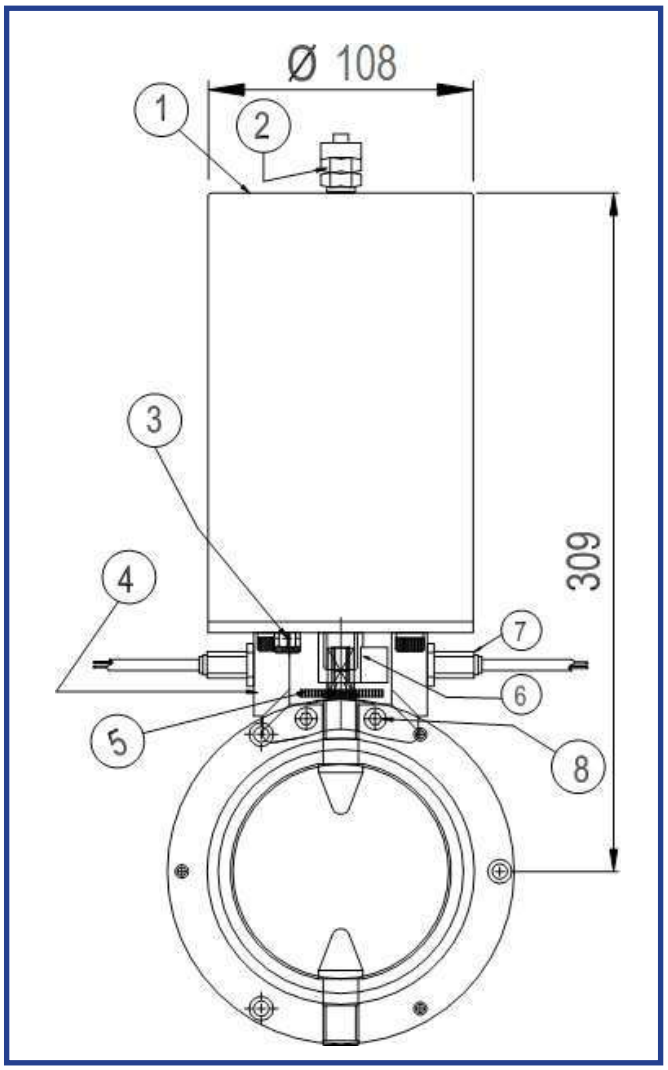

- Shut-off Time = 1.5 Seconds.
-Weight = 3.85Kg.
-Torque = 16 Nm @ 5Bar.
-Consumption = 0.266 Litres @5 Bar

PART NO.	SIZE	H (MM)
N/A	4" (101.6mm)	391

- Material:- SS304 body & fitting.
- 2 Positions - Valve fully open & Valve fully closed
- Mounting bracket accommodates inductive proximity switches .
- May be converted to double actingair/air operation
- Accessories: Adaptor X 1, M6 X 35 screw X 2, washer X 4, M6 Nut X 2, 1/8PT Quick coupler X 1

ZENITH BUTTERFLY VALVE STAINLESS STEEL (SS304) PNEUMATIC ACTUATOR (AIR/SPRING) TYPE - C2

Zenith Actuators - Air/Spring & Air/Air type pneumatic Actuator for use with Zenith Butterfly Valves. Can be fitted with Inductive Proximity sensors for feedback. See data sheets for Control Box and Micro switch applications

FOR USE ON 1" - 3" (25MM - 76MM) BUTTERFLY VALVES

ITEM	DESCRIPTION	QUANITIY
1	Actuation Cylinder	1
2	Air Supply Inlet	1
3	Air Outlet Filter/Silencer	1
4	Valve Mounting Bracket.	1
5	Red Plastic Position Indicator.	1
6	Micro Switch Housing .	1
7	Air Inlet Pipe Grommet.	1
8	Micro Switch Activator Rod.	1

- Shut-off time = 1.5 Seconds.
- Weight = 3.85Kg.
- Torque = 16 Nm @ 5Bar.
- Consumption = 0.266 Litres @5 Bar

PART NO.	SIZE	H (MM)
N/A	1" (25mm)	249
N/A	1 ½" (38mm)	252
N/A	2" (51mm)	262
N/A	2 ½" (63.5mm)	266
N/A	3" (76mm)	272

- Material:- SS304 Body & Fittings.
- 2 Position - Valve fully open & Valve fully closed
- Accommodates micro switches on topof the cylinder
- Can be used with or without control box
- May be converted to double actingair/air operation
- Accessories: Adaptor X 1, M6 X 35 Screw X 2, Washer X 4, M6 NUT X 2, 1/8PT Quick Coupler X 1

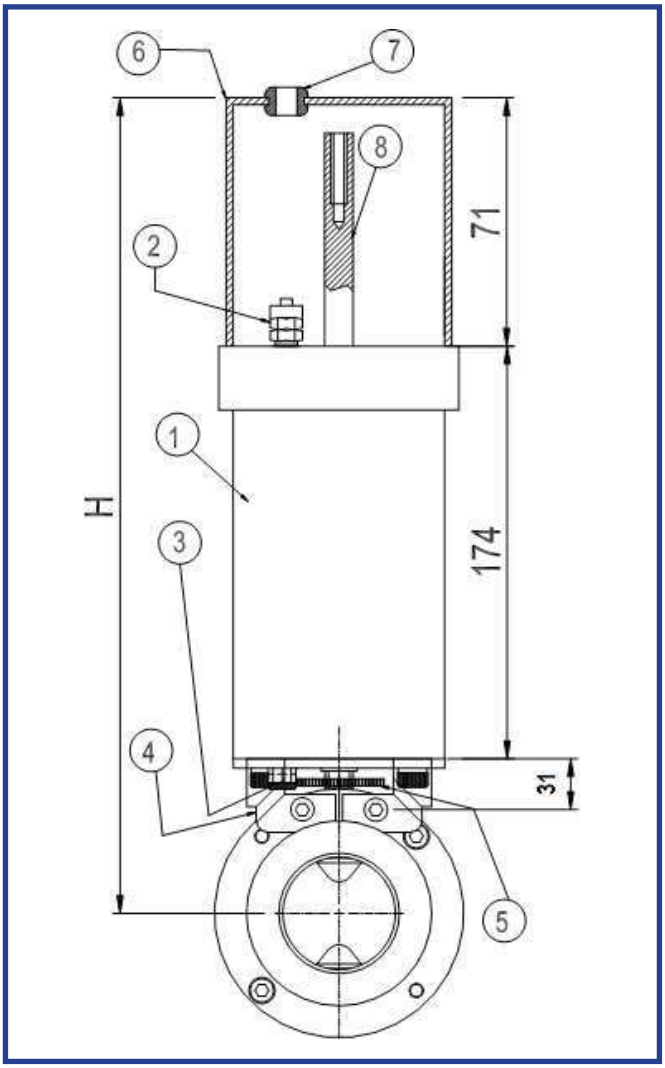

Optional Control box for use on C2 & C101 Actuator

ZENITH BUTTERFLY VALVE STAINLESS STEEL (SS304) PNEUMATIC ACTUATOR (AIR/SPRING) TYPE - C101

ZENITH Actuators - Air/Spring & Air/Air type pneumatic Actuator for use with Zenith Butterfly Valves. Can be fitted with Inductive Proximity sensors for feedback. See data sheets for Control Box and Micro switch applications

FOR USE ON 4" (104MM) BUTTERFLY VALVES

ITEM	DESCRIPTION	QUANITIY
1	Actuation Cylinder	1
2	Air inlet fitting. (Optional) Solenoid Valve SMC VT07-3G-01	1
3	Air Outlet Filter/Silencer	1
4	Valve Mounting Bracket.	1
5	Red Plastic Position Indicator.	1
6	Valve Drive Adaptor.	1
7	Proximity Switches. (Optional)- IG 5717	2
8	Mounting Screws.	1
9	Plastic Cover.	2
10	Piston Shaft	1
11	Air Hose Inlet	1
12	Proximity Switches. (Optional)- IN5129	2

- Shut-off time = 1.5 Seconds.
- Weight = 3.85Kg.
- Torque = 16 Nm @ 5Bar.
- Consumption = 0.266 Litres @5 Bar

PART NO.	SIZE	H (MM)
VTA4	4" (101.6mm)	391

- Material:- SS304 Body & Fittings.
- 2 Position - Valve fully open & Valve fully closed
- Accommodates micro switches on topof the cylinder
- Can be used with or without control box
- May be converted to double actingair/air operation
- Accessories: Adaptor X 1, M6 X 35 Screw X 2, Washer X 4, M6 NUT X 2, 1/8PT Quick Coupler X 1

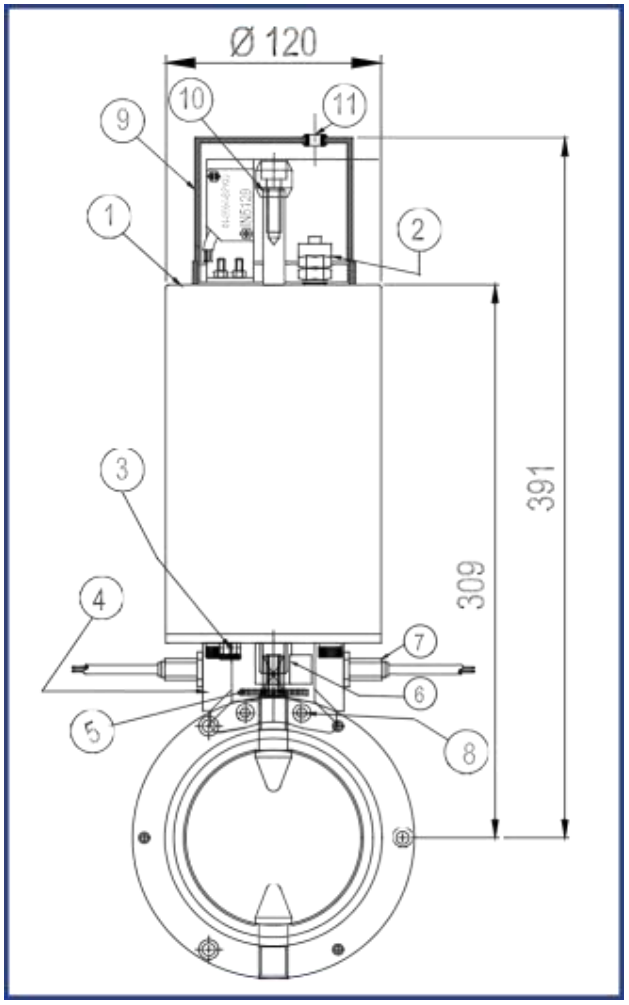

Optional Control box for use on C2 & C101 Actuator